B116

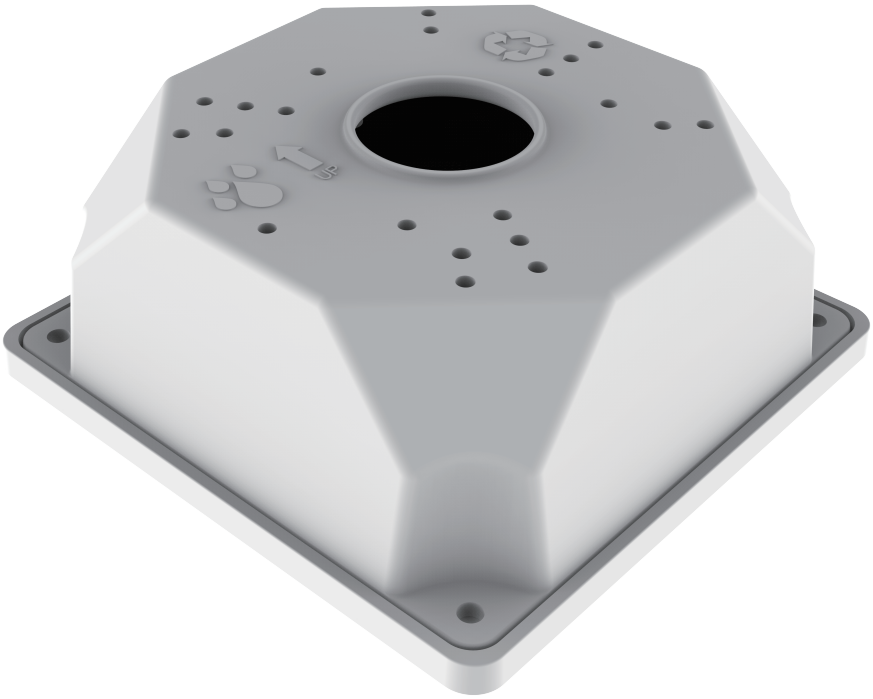

Features

Aesthetic design

Main material: ABS

Technical Specifications

Model	B116
Main material	ABS
Dimension(LxWxH)	116(L)x116(W)x49.4(H) mm
Weight	170g
Color	Dumb White
Operating Temperature	-30ºC ~ +60ºC
Humidity	< 95% RH
Waterproof grade	N/A
Applicable Madel	LBB/LBF/LBE/LBB60/LBB90/ TA60/TA90/BE60/BE90 BMSA/BMSC/BMSD/BH30/BQ24/BM24/CMSB

Dimensions (mm)

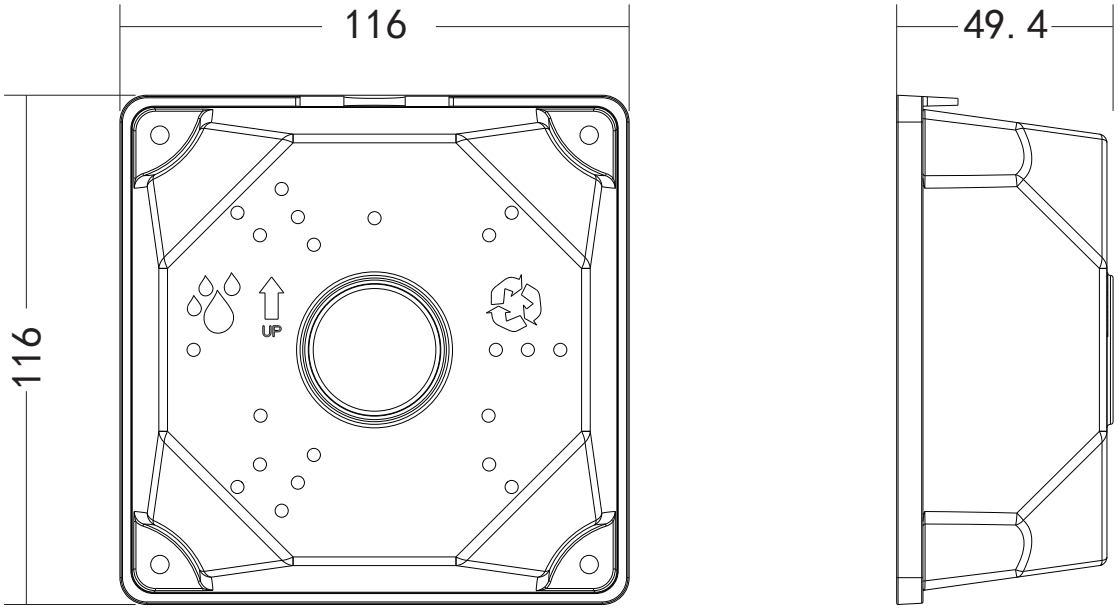

Packaging Information

PA4x16, 4pcs

PA4x25, 4pcs

Plastic expansion pipe, 4pcs

Data Subject To Change Without Notice